Alfa Laval CM

Condition Monitor

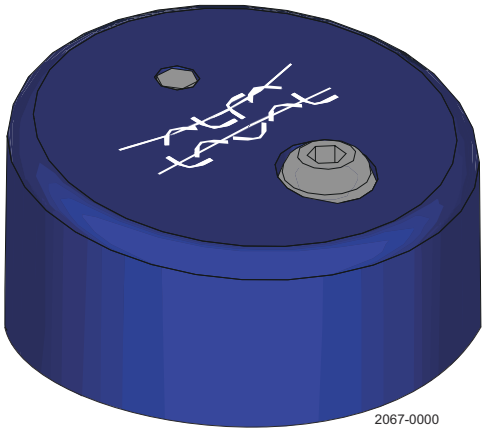

Instruction manual

Lit. Code 200002050-1-EN-GB
Manual No. 100002845

Published by
Alfa Laval Kolding A/S
Albuen 31
DK-6000 Kolding, Denmark
+45 79 32 22 00

The original instructions are in English

© Alfa Laval Corporate AB 2020-11

This document and its contents are subject to copyrights and other intellectual property rights owned by Alfa Laval Corporate AB. No part of this document may be copied, re-produced or transmitted in any form or by any means, or for any purpose, without Alfa Laval Corporate AB's prior express written permission. Information and services provided in this document are made as a benefit and service to the user, and no representations or warranties are made about the accuracy or suitability of this information and these services for any purpose. All rights are reserved.

Contents

1 EC Declaration of Conformity 5

2 About Condition Monitor 7

2.1 Purpose of this manual 8

2.2 Use of symbols 9

3 Installation 11

3.1 General Guidelines 11

3.2 Alfa Laval equipment guidelines 11

3.3 Setup 12

3.4 Software 13

4 Safety 15

4.1 Product 15

4.2 Safety – Installation 15

4.3 Recycling information 15

5 Troubleshooting 17

5.1 Magnet functionality 17

5.2 Tips and tricks 19

5.3 Parts lists 19

6 Addendum 21

1 EC Declaration of Conformity

The Designation Company

Alfa Laval Kolding A/S

Compagny Name

Albuen 31, DK-6000 Kolding, Denmark

Address

+45 79 32 22 00

Phone No

hereby declare that

Alfa Laval CM	Condition Monitor
Designation	Type

Conformities

- ESTI EN 301 480 - 1 Electromagnetic Compatibility (EMC)
- CISPR32 EN 55032 - Electromagnetic compatibility of multimedia equipment.
- ESTI EN 300 328 V2.1.1 - Wide band transmission system
- IEC 62479;2010 - Assessment of the compliance of low power electronic and electronical equipment with the basic restrictions related to human exposure to electromagnetic fields (10 MHz to 300 GHz).
- IEC 62368-1:2018 - Audio/video, information and communication technology equipment.
- FCC part 15.247 - Spread spectrum systems
- Telecom
- RoHS2 Directive 2011/65/EU
- REACH

The person authorised to compile the technical file is the signer of this document

Global Product Quality Manager Hygienic Fluid Handling	Lars Kruse Andersen	
Title	Name	Signature
Kolding	2018–10–01	
Commpany	Date	

2 About Condition Monitor

The Condition Monitor (CM) is a compact, easy to use, vibration monitoring system which allows the user to monitor the condition of rotating equipment. The CM is battery powered, and communication is performed wirelessly by means of Bluetooth, thus no need for cabling.

During operation, the CM measures equipment vibration. The measurements are compared against a baseline set during an initial “Teach” calibration period, which reflects a normal condition. The user is notified in case of vibration deviations that exceeds user configurable thresholds.

Advanced frequency analysis functions assist the user in detecting maintenance demanding equipment components in due time, so that maintenance can be carried out as a planned operation.

Up to 3 months of measurements can be stored directly on the CM.

NOTE

The CM shall be used in conjunction with a handheld device (not included) running Android or iOS with the Alfa Laval Condition Monitor application installed.

The battery life of the CM is expected to be at least 2-3 years under normal operating conditions.

Since this depends on user behavior, battery life time is excluded from warranty.

NOTE

The CM is approved for use in the following contries:

United States, Canada, China and The United Kingdom, **Europe**; Austria, Belgium, Cyprus, Czech Republic, Denmark, Estonia, Finland, France, Germany, Greece, Hungary, Ireland, Italy, Latvia, Lithuania, Luxembourg, Malta, Poland, Portugal, Slovakia, Slovenia, Spain, Sweden and The Netherlands, **EFTA**; Switzerland, Iceland, Liechtenstein and Norway.

2.1 Purpose of this manual

NOTE

Save this manual for future reference and keep it readily available. For detailed use of product guidance, consult the Alfa Laval Condition Monitor application. Requesting other information for instructions, situations, or events that are not considered in this manual or in the sales documents, please contact your local Alfa Laval representative. Always specify the exact product type and identification code when requesting technical information or spare parts.

The purpose of this manual is to provide necessary information for:

- **Installation**
- **Safety**
- **Recycling**
- **Troubleshooting**
- **Related documents**

2.2 Use of symbols

This section describes the symbols used throughout this manual.

NOTE

Note

Information considered important to the reader, but not related to hazards.

ATTENTION

Attention

Informs the reader about a potential hazard, if not avoided will result in serious injury.

HOT SURFACE

Hot surface

Informs the reader about potential hot surfaces.

RELATED SECTION / REFERENCE

Related section / reference

Informs the reader about a section or reference containing further detailed information.

3 Installation

NOTE

When mounting the CM, it is important to achieve a solid mechanical connection between the equipment and the CM in addition to any adapter if fitted, ideally mounted to a flat surface. The CM can be mounted on surfaces up to 80° C (176° F).

3.1 General Guidelines

The general guidelines for custom fitting of the CM to rotating equipment, we recommend the following.

CM screw Button SHCS	**Clearance hole** [Drill Size / Depth]	**Thread** [Tap Size / Depth]	**Tool** Hex key	**Max torque**
M6 x 30mm	5mm / 10mm	M6 / 7mm	4mm	10 Nm / 7.5 ft-lb

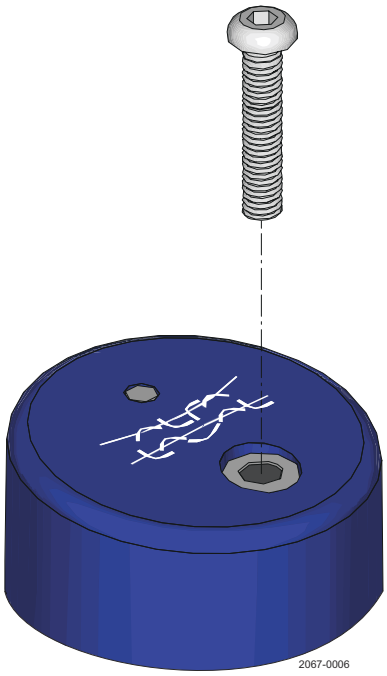

3.2 Alfa Laval equipment guidelines

For Alfa Laval equipment which does not have the specific M6 tapping available for retro-fit, an adapter kit can be supplied.

Please find the relevant addendum for the specific Alfa Laval equipment.

3.3 Setup

1. Install and open the Alfa Laval Condition Monitor application.

   Scan the QR code see *“Section 3.4 Software”.*

2. Wake up the CM by shaking it, until the LED flashes blue or hold a magnet to the QR-code until the LED flashes blue, then remove the magnet.

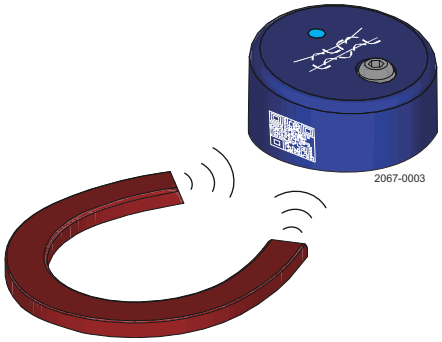

3 Mount the CM on the rotating equipment.

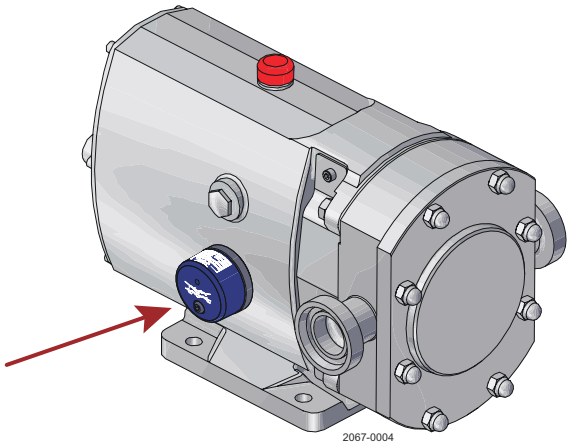

4 Connect your handheld device with the CM, and follow the “First Time Setup” instructions in the Alfa Laval Condition Monitor application.

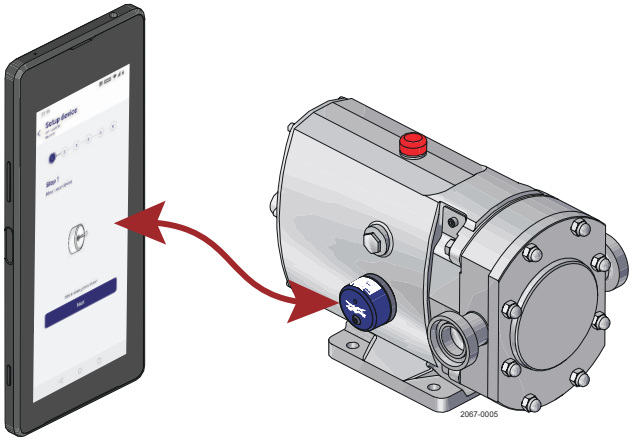

3.4 Software

To install the Alfa Laval Condition Monitor application, use a handheld device that operates with Android or iOS - Direct download via QR-code.

Download on the App Store

ANDROID APP ON Google play

2067-0007

** Application download in China with Android: Go to Condition Monitor product page, at www.alfalaval.cn and download the application.*

NOTE **Software Compatibilities**

Requires iOS 9 or later or Android 4.4 or later. Requires Bluetooth® 4.0 or above.

4 Safety

NOTE

Attention

Failure to observe the instructions contained in this manual could result in personal injury and property damage, and may void the warranty. Read this manual carefully before installing and using the product.

4.1 Product

ATTENTION

Attention

Never heat the Condition Monitor to temperatures in excess of 90°C (194°F). Heating above these temperatures could result in serious injury. Never dispose of the Condition Monitor in a fire, this could result in serious injury. This product contains a ithium thionyl chloride battery, do not crush/cut open or disassemble the product in any way.

This product contains a ithium thionyl chloride battery, do not crush/cut open or disassemble the product to remove the battery in any way.

4.2 Safety – Installation

This product should only be installed/commissioned by instructed or otherwise competent personnel.

HOT SURFACE

Hot surfaces

When mounting the CM on external equipment, such as pump gearboxes, be aware of potential hot surfaces, always wear appropriate protective equipment.

The CM can be mounted on surfaces up to 80° C (176° F).

4.3 Recycling information

RELATED SECTION / REFERENCE

Attention

Product contains lithium thionyl chloride.

This product contains a lithium thionyl chloride battery, recycle or dispose of the product properly. Local, state or federal laws may prohibit disposal of lithium thionyl chloride batteries in ordinary trash. Consult local waste management companies for assistance in the correct disposal of this product.

5 Troubleshooting

Issue	Cause	Connection
The CM does not appear in the “My Devices” list.	The CM is in sleep mode.	Shake the CM and wait for the blue LED to blink or wake the CM by use of a magnet, see *“Section 5.1 Magnet functionality”*
The CM does not wake up when performing the wake instructions.	The CM software may be suspended.	Perform a software reboot by use of the magnet, if the reboot does not correct the issue, perform a factory reset by use of a magnet, see *“Section 5.1 Magnet functionality”*
The CM does not respond to a magnet, but is connectable via the application.	Make sure the magnet is placed correctly, at the QR code on the CM.	If the problem persists, try a different type of magnet.
During Setup, I successfully woke up the CM, but now it does not appear in the “My devices” list.	The CM returns to sleep mode after 3 minutes, if no application connection has been made.	Perform a wake instruction again.

5.1 Magnet functionality

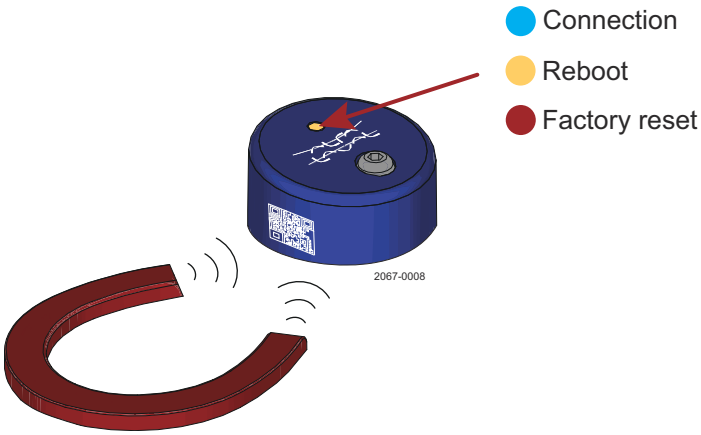

In case the CM becomes unconnectable via the Alfa Laval Condition Monitor application the CM firmware can be restarted by holding a magnet to the QR code located on the CM.

The magnet HMI describes how to operate the magnet, the magnet menu is divided into colors. Blue for connection, yellow for reboot and red for factory reset.

If a reboot is wanted, hold the magnet to the QR code on the CM. The CM will indicate the presence of the magnet by flashing the green LED and then proceed through the magnet menu. When the CM starts to flash yellow remove the magnet, if the reboot command has been confirmed the CM will respond with three yellow LED flashes.

In the event a firmware reboot does not alleviate the problem, the magnet can also be used to perform a factory reset of the CM, this will delete all stored data and completely reset the CM.

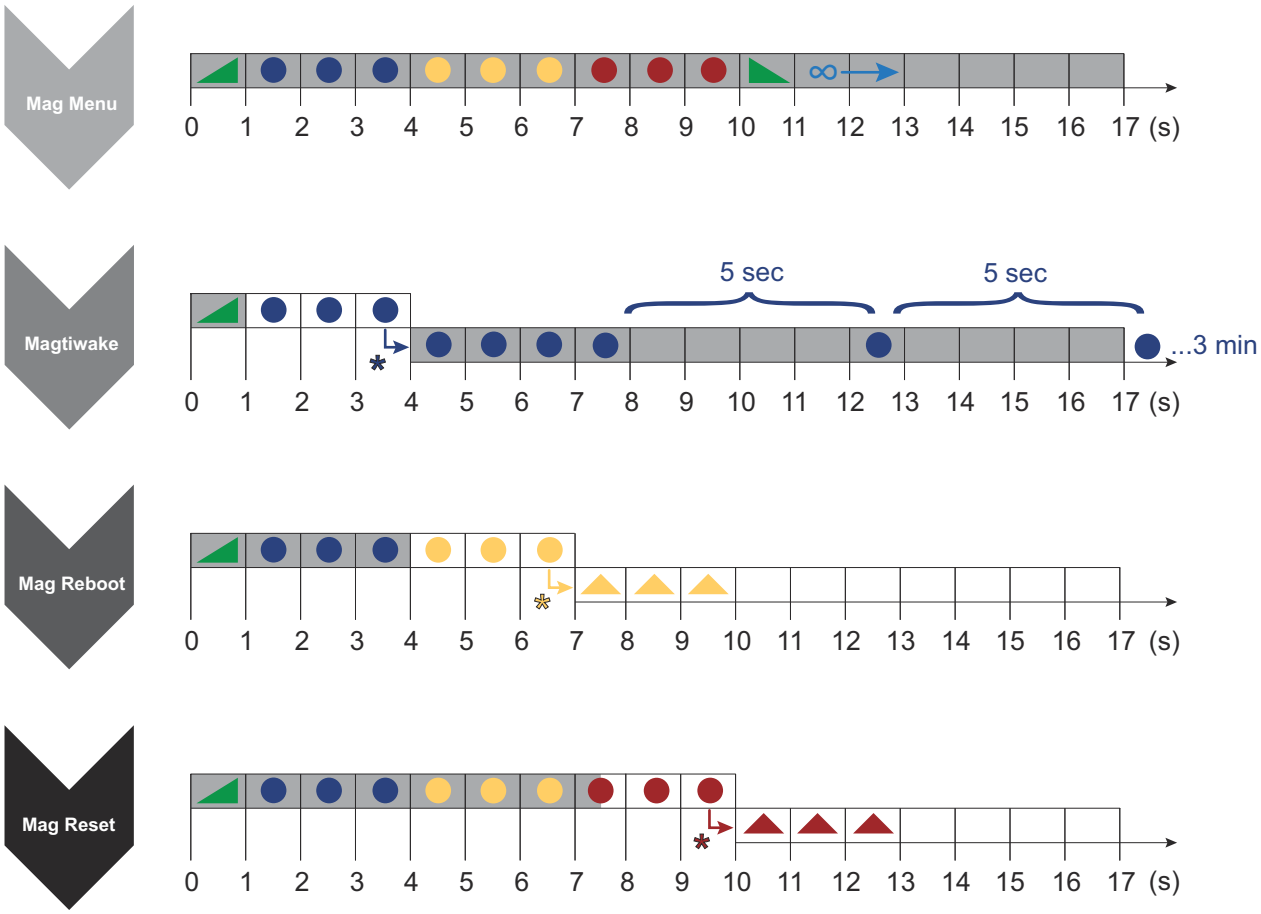

Magnet ON
Magnet OFF
LED Ramp Up (Green)
LED Ramp Down (Green)
LED Ramp Up (Yellow)
LED Ramp Down (Red)
No action

LED Single Blink (Blue)
LED Single Blink (Yellow)
LED Single Blink (Red)
Connectable
Reboot
Factory Reset

5.2 Tips and tricks

Wink function: Locating a CM among other CM´s

To easily identify a CM from others, use the Wink functionality. In the My Devices list tap and hold a CM card, until the Wink dialog pops up. Selecting Wink, will instruct the CM to flash green with 1 second between flashes for a total of 1 minutes, giving the user time to visually locate the CM.

Sleep mode for storage

When storing a CM, remember to put it in sleep mode, in sleep mode all data will be preserved, while all sub routines such as measuring, logging and comparison with baseline levels, are suspended. While in sleep mode, the CM life expectancy is greatly increased. To exit sleep mode, simply perform one of the two wake instructions. See *Section 3.3 Setup*

Name your CM

For a quick and easy overview of your equipment, use the custom name function and name your CM with either type/name/P&ID or something unique to you.

For example, “SRU3 Intake ID 5.02”.

Event log

If the CM has observed vibrations that triggered a notification, use the Event log to see details of exactly when the notification occurred.

5.3 Parts lists

Item name.	Article number.	Description.
CM	8010000561	Condition Monitor.
Screw M6	8010000565	Condition Monitor Mounting screw.

6 Addendum

Alfa Laval Specific Equipment Installation Guidelines.